LAB Online Exhibition

Operation Manual

knowledge

Action movie

www.1788lab.com E-mail:info@1788lab.com

Table of Contents

1 Scope of delivery 2

2 Safety 6

3 Function 10
3.1 The Single Platform 10
3.2 Syncore Reactor 11
3.3 Syncore Polyvap 12
3.4 Syncore Analyst 13
3.5 Individual components 13

4 Putting into Operation 14

5 Operation 17
5.1 The Single Platform 17
5.2 Safety Instructions 17
5.3 Temperatur und Drehzahl 19
5.4 Programm Mode: Temperature / Time Steps 20
5.5 Further Control Parameters 22
5.6 Pre-Set Safety Settings 23
5.7 Overview of Switches 24
5.8 Signal Outlets 25
5.9 After Running of the Programmable Valve 26
5.10 RS-232 interface 26
5.11 Signal Inlets 27
5.12 Adjusting the Eccentricity 28
5.13 Unbalance Compensation 30
5.14 Troubleshooting: The Single platform 33

6 Maintenance 34
6.1 Cleaning 34
6.2 Routine Inspection of the Equipment (Monthly) 34
6.3 Routine Inspection of the Equipment (Annually) 35
6.4 Calibration 35
6.5 Error Messages: Calibration 37
6.6 Replacement of the Fuses 37
6.7 Error Messages: Hardware 38
6.8 Customer Service 38

7 Taking out of Operation 39

8 Replacement Parts 40
8.1 Single Platform 40

9 Appendix 41
9.1 Technical Data 41
9.2 Materials Used 41
9.3 FCC requirements (for USA and Canada) 42
9.4 Declaration of Conformity 43

Read this Operation Manual through carefully before starting to use the **BÜCHI Syncore** Product Line.

Always keep these instructions ready at hand close to the equipment so that they may be consulted quickly at all times. Chapter 2 provides important safety instructions that must be followed to ensure safe operation of the unit.

We reserve the right to make technical changes without prior notice. No portions of this Operation Manual may be reproduced in any form (including with the use of electronic or optical systems), duplicated, or distributed without written permission from BÜCHI Labortechnik AG. All rights reserved. Copyright © BÜCHI Labortechnik AG 2002

en, Version B (44 pages)	**Order code**
Syncore Instrucctions	**96887**

1 Scope of delivery

1.1 Configuration Syncore Reactor

Figure 1: Büchi Syncore Reactor, complete

Components with S-Cooler		Order code
Syncore Reactor	230 V 50/60 Hz	**38445**
Syncore Reactor	120 V 50/60 Hz	**38446**
Syncore Reactor	100 V 50/60 Hz	**38447**

Components with C-Cooler		
Syncore Reactor	230 V 50/60 Hz	**38448**
Syncore Reactor	120 V 50/60 Hz	**38449**
Syncore Reactor	100 V 50/60 Hz	**38450**

Scope of delivery		
1	Syncore Single Platform complete	
Included:		
1	Adjustment wrench for adjusting eccentricity and unbalance compensation	**38477**
1	Rack R-24, for round glasses, complete	**40845**
50	Test tubes for Rack R-24	**38469**
1	Reflux module R-24	**41901**
1	Inert gas cover R-24	**41918**
1	Condenser unit S, 1000 ml	**37690**
or		
1	Condenser unit C, 1000 ml	**38371**
1	Power system cable PNE, 1.5 m	
	Type CH	**10010**
	Type Schuko	**10016**
	Type GB	**17835**
	Type USA	**10020**
	Type AUS	**17836**
1	Operation Manual:	
	German	**96886**
	English	**96887**
	French	**96888**
	Italian	**96889**
	Spanish	**96890**

Table 1: Scope of delivery for the Syncore Reactor

Figure 2: Büchi Syncore Polyvap, complete

1.2 Configuration Syncore Polyvap

Components with S-Cooler		**Order code**
Syncore Polyvap	230 V 50/60 Hz	**37698**
Syncore Polyvap	120 V 50/60 Hz	**41816**
Syncore Polyvap	100 V 50/60 Hz	**41819**

Components with C-Cooler		
Syncore Polyvap	230 V 50/60 Hz	**38343**
Syncore Polyvap	120 V 50/60 Hz	**38344**
Syncore Polyvap	100 V 50/60 Hz	**38345**

Scope of delivery		
1	Syncore Single Platform, complete	
Including:		
1	Adjustment wrench for adjusting eccentricity and unbalance compensation	**38477**
1	Rack R-24, for round glasses, complete	**40845**
50	Test tubes for Rack R-24	**38469**
1	Vacuum cover for Rack R-24, complete	**38150**
1	Condenser unit S, 1000 ml	**37690**
or		
1	Condenser unit C, 1000 ml	**38371**
1	Power system cable PNE, 1.5 m	
	Type CH	**10010**
	Type Schuko	**10016**
	Type GB	**17835**
	Type USA	**10020**
	Type AUS	**17836**
1	Operation Manual:	
	German	**96886**
	English	**96887**
	French	**96888**
	Italian	**96889**
	Spanish	**96890**

Table 2: Scope of delivery for the Syncore Polyvap

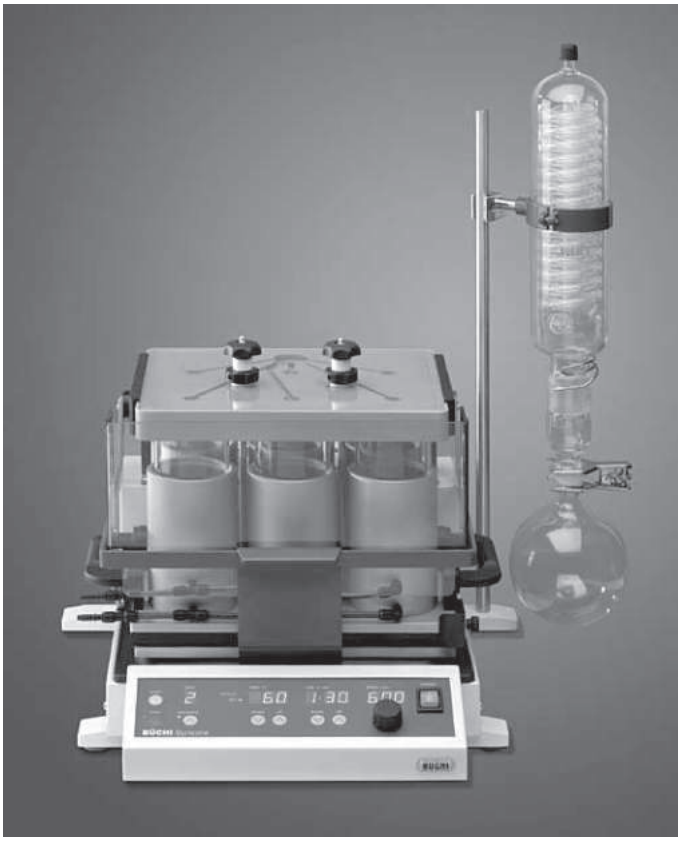

Figure 3: Büchi Syncore Analyst, complete

1.3 Configuration Syncore Analyst

Components with S-Cooler		**Order code**
Syncore Analyst	230 V 50/60 Hz	**37699**
Syncore Analyst	120 V 50/60 Hz	**41817**
Syncore Analyst	100 V 50/60 Hz	**41820**

Components with C-Cooler		
Syncore Analyst	230 V 50/60 Hz	**38315**
Syncore Analyst	120 V 50/60 Hz	**38316**
Syncore Analyst	100 V 50/60 Hz	**38317**

Scope of delivery		
1	Syncore Single Platform, complete	
Including:		
1	Adjustment wrench for adjusting eccentricity and unbalance compensation	**38477**
1	Rack R-6, with cooling of the residual volume , complete	**38184**
Including:		
2	Cooling hoses, 1m	**04133**
1	Set of 6 plastic plugs	**38542**
6	Glasses for the Rack R-6 with residual volume 0.3 - 0.4 ml	**38485**
1	Vacuum connection for the Rack R-6, complete	**38246**
1	Condenser unit S, 1000 ml	**37690**
or		
1	Condenser unit C, 1000 ml	**38371**
1	Power system cable PNE, 1.5 m	
	Type CH	**10010**
	Type Schuko	**10016**
	Type GB	**17835**
	Type USA	**10020**
	Type AUS	**17836**
1	Operation Manual:	
	German	**96886**
	English	**96887**
	French	**96888**
	Italian	**96889**
	Spanish	**96890**

Table 3: Scope of delivery for the Syncore Analyst

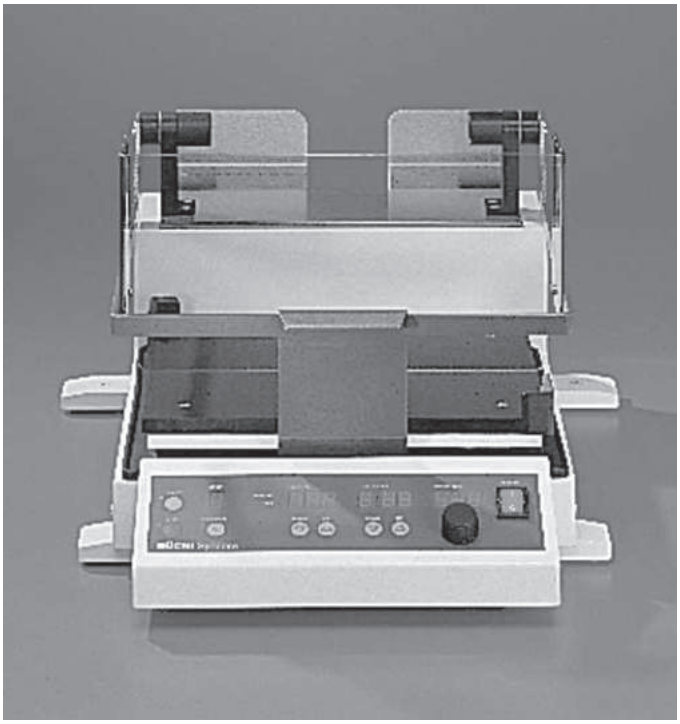

Figure 4: Syncore single platform, complete

1.4 Individual components

Single Platform

Components	Order code
Syncore Single Platform 230 V 50/60 Hz	**38429**
Syncore Single Platform 120 V 50/60 Hz	**38430**
Syncore Single Platform 100 V 50/60 Hz	**38431**

Scope of delivery		
1	Syncore Single Platform, complete	
Including:		
1	Adjustment wrench for adjusting eccentricity and unbalance compensation	**38477**
1	Power system cable PNE, 1.5 m	
	Type CH	**10010**
	Type Schuko	**10016**
	Type GB	**17835**
	Type USA	**10020**
	Type AUS	**17836**
1	Operation Manual:	
	German	**96886**
	English	**96887**
	French	**96888**
	Italian	**96889**
	Spanish	**96890**

Table 4: Individual components single platform

2 Safety

This unit and all its components have been built in accordance with the state of the art and recognized safety rules. Nevertheless, certain risks and dangers may be involved when working with the unit or its individual components:

- Whenever the unit is not being used in accordance with its intended purpose, or
- Whenever the staff operating the unit have not lack sufficient training and know-how.

2.1 Symbols

Stop
Information on hazards that can result in severe material damage or serious to fatal injuries.

Warning
Information on hazards that can result in injury to one's health or material damage.

Caution
Information pointing out technical requirements. A failure to follow these instructions can cause malfunctions, uneconomical operation, and production losses.

2.2 Requirements for the User

This unit and all accessories for the Syncore line of equipment may be used only by laboratory staff and other individuals who, based on their education, training, or professional experience, are fully aware of the risks involved in their use. Staff lacking this training or staff currently being trained need careful instruction. These Operating Instructions are valid as a basic requirement.

2.3 Authorized Use

This unit has been designed and built as a laboratory instrument. The authorized application for the Syncore single platform inconjunction with accessories from the Syncore product line is as follows:

Syncore Reactor/Syncore single platform with accessories:

- Chemical synthesis in various formats and reaction vessels over a range of temperature from -20 up to + 150 °C, max. (Syncore single platform and Syncore racks)

Syncore Polyvap/Syncore single platform with accessories:

- Parallel evaporation of solvents in various formats and containers across a range of temperatures from room temperature up to + 150 °C and within a range of pressures from 1 mbar up to ambient pressure.

Syncore Analyst:

- Parallel evaporation of solvents from 6 different samples across a range of temperatures from room temperatures up to + 100 ° (or bypassing pre-set safety settings, up to 150 °C), within a range of pressures from 1 mbar up to ambient pressure.

Applications for the Syncore line of equipment include:

- Parallel organic - inorganic chemical synthesis in theliquidor in the solid phase.
- Parallel material investigations, digestions, preparation of samples of from 4 to 96 samples, with sample volumes ranging from 500 down to 1 ml.
- Parallel evaporation of from 4 to 96 samples with sample volumes from 1 ml up to 500 ml after chemical synthesis, after chromatography, after extraction, etc.
- Parallel evaporation in chemical analysis, guaranteeing a residual volume after the evaporation.

2.4 Unauthorized Use

Any use other than those indicated above and any application that does not correspond to the Technical Data is considered to be improper use. The operator himself bears sole responsibility for any risks arising from such use.

The following in particular are explicitly forbidden:

- The processing of samples that can explode or ignite explosively as the result of impact, friction, heat, or sparking (e.g., explosives, etc.).
- The carrying out of chemical reactions that can produce substances that can explode or ignite explosively as the resultof impact, friction, heat, or sparking (e.g., explosives, etc.);
- Use of the unit in rooms that require explosion-proof equipment;
- Use of the single platform with sample holders or sample containers that have not been developed for use on the Syncore single platform.
- Working at above atmospheric pressure

2.5 Basic Hazards

The basic hazards arise from:

- Chemicals that are toxic or cause allergic reactions, or can, in a chemical reaction, produce compounds that are toxic or cause allergic reactions;
- Solvent materials which can form peroxides
- Very hot or very cold parts made of plastics and metals (Burn injuries)
- Kinked hoses or the dissolving of hose materials used to introduce liquids, compressed gases under pressure
- Moving parts which rotate at high speed about an axis and which if used in animproper way can lead to injury or the destruction of laboratory equipment
- Glass vessels under vacuum which can implode
- Electric cables which can be damaged or incorrectly connected
- Combustible gases or solvent vapors in the area immediately adjacent to the Syncore.

2.6 Safety procedures

The regional and local laws and regulations must be observed. It is necessary to wear personal protective equipment such as **protective goggles**, **gloves** and **a laboratory coat**.

It is only permissible to assemble and dismantle certain parts of the Syncore when such action is necessary to carry out the functional requirements.

This activity can be performed manually or by use of the tool which is supplied. Except for authorized maintenance personnel, the removal of protective devices and cover plates/ shrouding with the aid of a conventional tool is forbidden.

The owner of the company is responsible for the instruction of his personnel. To assist in this context, it is possible to order these Operating Instructions in other languages. At all times, these Operating Instructions must be available - as a component part of Syncore - to the operating personnel at the point where the equipment is employed.

The owner of the company will inform the Manufacturer immediately regarding all events having a bearing on safety which take place while the equipment is in use.

2.7 Modifications

No modifications may be made on this unit or on spare and accessory parts, nor is use of spare or accessory parts other than those indicated in this Operation Manual permissible, without the prior written approval of BÜCHI Labortechnik AG.

3 Function

The Syncore line of equipment consists of a single platform, various holders for samples (racks), vacuum covers, and further accessories.

There are three standard configurations:
- Syncore Reactor
- Syncore Polyvap
- Syncore Analyst

These are custom-tailored to customer needs in various applications. The standard configurations can modified later to meet new requirements by using additional accessories.

3.1 The Single platform

Figure 5: Syncore single platform (front view)

The Syncore single platform is equipped with a heater and a shaking mechanism.
- The heating is accomplished across a heating foil on a base plate ①.
- The temperatures for heating range from room temperature up to 150 °C.

The shaking movement is circular and horizontal, with an easily adjustable eccentricity (radius from 0 to 5 mm). Maximum rotational speed is 600 RPM. An easily adjustable compensating counterweight makes it possible to correct for rack- or weight-specific unbalances in the single platform.

A protective shield ② protects the operator from contact with hot, cold, or moving parts.

The unit is controlled either manually or via a program. The program mode includes 9 individual temperature / time steps, each of which may last up to 9 hours, 59 minutes max. Thanks to the two valve outlets, valves may be operated either under temperature control or controlled by the program. With programmed control, for example, it is possible to ensure that the cooling water will not be switched off before one hour after completion of the program.

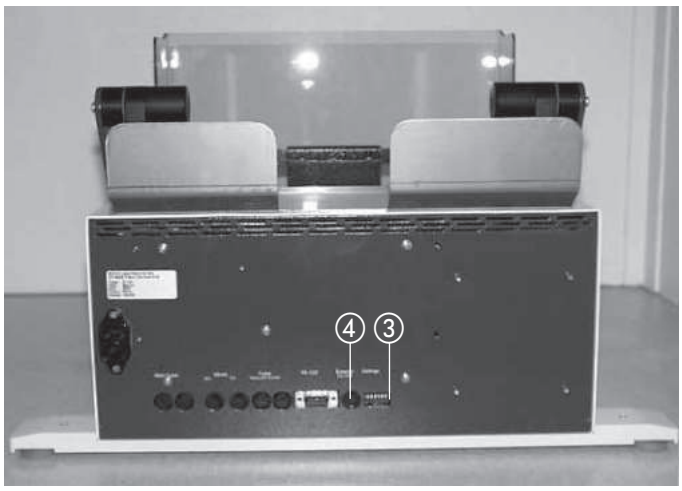

Figure 6: Syncore single platform (back view)

The pre-set safety settings ③ may prescribe a maximum temperature of either 100 °C or 150 °C. In addition, the speed can be pre-defined and limited to either 300 or 600 RPM.

The single platform has an analog TTL signal socket ④ that can process an external start or stop signal. This means that the unit can be operated via an external control unit, e.g., can be integrated into a robot station.

The Syncore single platform has a pre-defined stopping position. After a vortex movement of the base plate, the unit automatically re-finds its pre-defined stopping position, thereby enabling integration of the single platform into fully automated systems.

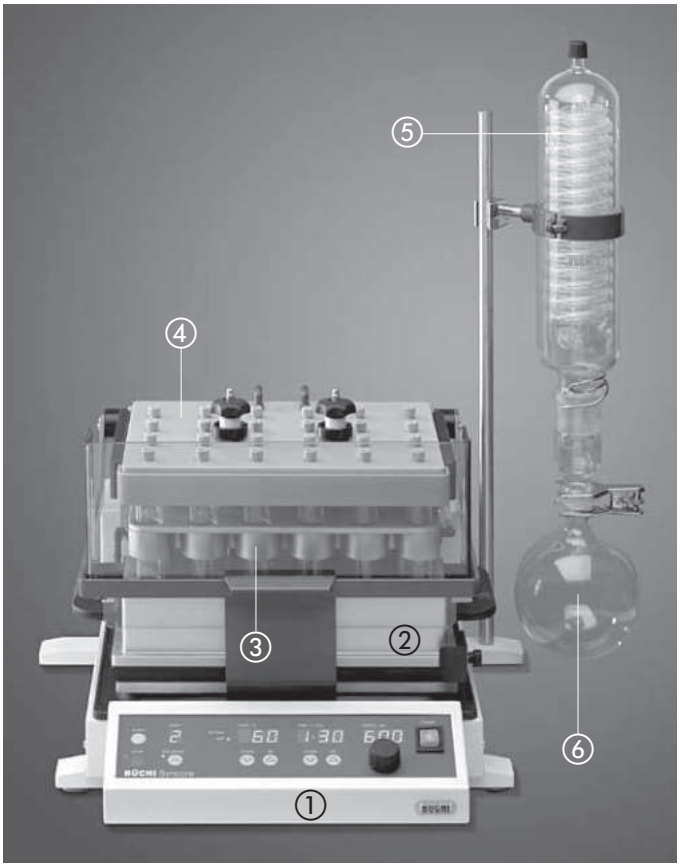

Figure 7: Syncore Reactor

3.2 Syncore Reactor

The Syncore Reactor consists of a basic unit ①, a rack for 24 samples ② and 24 appropriate glass vessels capable of being closed, a return flow module ③ an inert gas cover ④ and a condenser unit ⑤ complete with appropriate receiving flasks ⑥.

By means of this configuration it is possible to carry out simultaneously 24 different chemical syntheses in the liquid phase or solid phase under reflux and under inert gas, followed by a concentration activity (See also Syncore Polyvap).

Range of temperatures:	Room temperature to 150 °C, can be extended down to -20 °C using an optional cooling plate and a cooling aggregate.
Maximum sample volume:	30 ml.

The samples are shaken at up to 600 RPM (max.) in a horizontal vortex movement. The user can adjust the eccentricity of the vortex movement to fit the given working volume.

A simple mechanism permits easy adjustment of a compensating counterweight, ensuring smooth operation even at high rotational speeds.

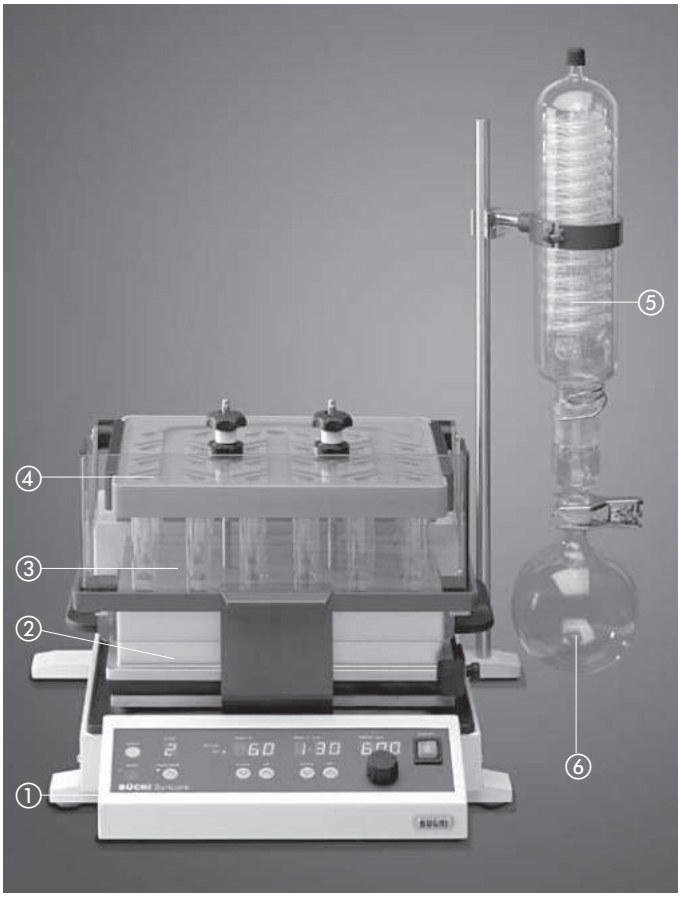

Figure 8: Syncore Polyvap

3.3 Syncore Polyvap

The Syncore Polyvap consists of a single platform ①, a rack ② for 24 samples, and 24 fitting glass containers ③, a vacuum cover ④, and a condenser unit ⑤ with a suitable receiving flask ⑥.

This configuration can be used to condense 24 different samples simultaneously down to dryness.

Range of temperatures: Room temperature to 150 °C
Maximum sample volume: 30 ml.

The samples are shaken in a horizontal vortex movement at up to 300 RPM. The user can adjust the eccentricity of the vortex movement to suit the given working volume.

A simple mechanism permits manual adjustment of a compensating counterweight, thereby ensuring smooth operation even at high rotational speeds.

The solvent vapors are drawn off across a central vacuum cover and directed to a condenser unit. This vacuum cover is heated, making it possible to evaporate solvents that have a high boiling point.

The vacuum cover seals off every sample container individually. Cross-contamination is prevented by means of baffles and the directing of the steam inside the vacuum cover.

The Syncore Polyvap configuration can be used in the most varied kinds of applications, e.g., for simultaneous evaporation of samples after synthesis, after chromatography, extraction (liquid-liquid, solid-liquid), analysis, etc.

Other formats and volumes can be processed by using other optional sample holders (racks) and vacuum covers.

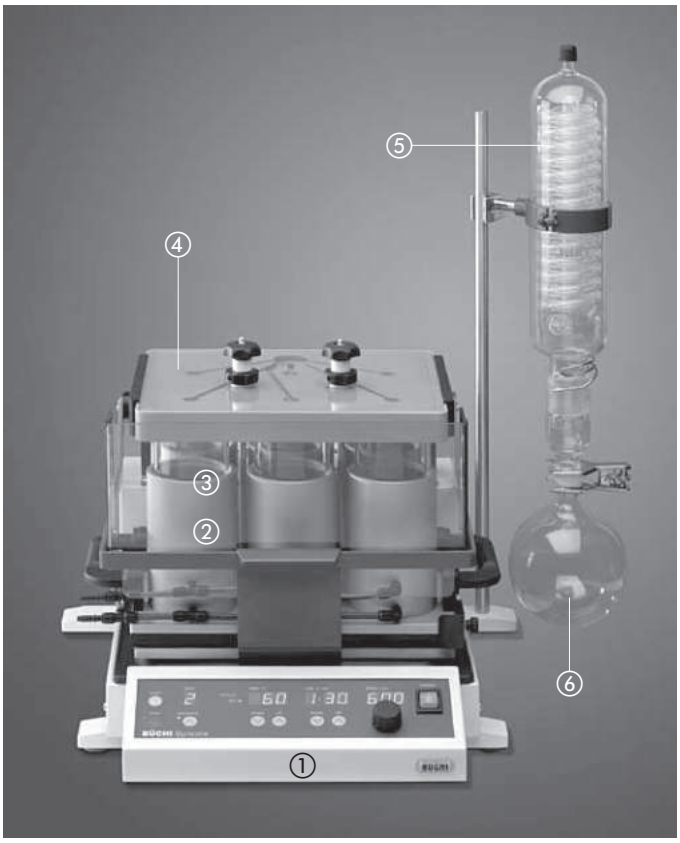

Figure 9: Syncore Analyst

3.4 Syncore Analyst

Syncore Analyst consists of a basic unit ①, a rack with residual volume cooling for 6 samples ② with 6 appropriate glass vessels ③ having residual volume appendices, a vacuum connection ④ and a condenser unit ⑤ with appropriate receiving flasks ⑥.

This unit can be used to concentrate up to 6 different samples simultaneously down to residual volumes of from 0.3-0.5 ml per sample.

With two hose connections, the rack ② makes it possible to direct a flow of cooling liquid through the inside of the tube. This keeps the residual volume in the nipple h of the sample glass cooled to a temperature between 0 °C (with the optional cooling unit) and room temperature (cooling water) until it is removed by the operator.

Range of temperatures: Room temperature to 150 °C
Maximum sample volume: 250 ml.

A horizontal vortex movement at a speed of 600 RPM (max.) shakes the samples. The operator can adjust the eccentricity of this vortex movement to suit the working volume at hand.

A simple mechanism is used for manual adjustment of the compensating counterweight to ensure smooth operation even at high rotational speeds.

The vapors from the solvents are collected across a vacuum connection at the center and directed to a condenser unit.

The vacuum connection is heated, enabling the evaporation of solvents with a high boiling point.

Each specimen tube is sealed off individually across the vacuum connection, Baffles and controlled directing of steam within the vacuum connection prevent cross-contamination.

The Syncore Analyst is used in the evaporation of samples in the analysis of residues from soils, foodstuffs, or similar materials.

3.5 Individual components

The Syncore product line is modular throughout. Every accessory is usable at any time with a Syncore single platform and with all standard configurations.

The different accessories are described in the Accessories Section of the Operating Instructions.

4 Putting into Operation

4.1 Complete and intact delivery

After unpacking the delivery, inspect for any signs of damage. It is important that any damage that may have occurred in transit is recognized at the time of unpacking. If any damage is detected, it is necessary to determine the facts of the situation immediately (to be reported to the postal authorities, railway company or transport agent). Please retain the original packing material for any possible transport operation. at a later date.

4.2 Working location

The Syncore-Basic Unit weighs 30 kg and should never be moved or lifted by a single person. It should be placed in a horizontal position upon a clean, level and stable base structure (Check with a spirit level). For safety's sake, a distance of at least 30 cm must be maintained from the wall or from other objects at the back and at the sides of the unit, and a distance of at least 50 cm above the unit.

No containers, chemicals, or other equipment are permitted to stand behind, next to, or above the unit, or on shelves connected to the laboratory table. The single platform may be operated only at ambient temperatures between 5°C and 40° C.

The single platform must be operated from the front. There must be open space available for placement of racks or other accessory equipment. Take care to install the unit ergonomically and so that it will be comfortable for your back.

4.3 Electrical Connections

Compare the voltage indicated on the unit nameplate with the voltage indicated on the delivery notice and the local power system voltage. Do not connect the unit to the power system unless these voltages all agree.

The power system cables and plug sockets must be grounded. If they are not, do not connect the unit to the power system. Connect the unit to the power system and switch the main breaker switch ON. All displays are activated and the unit runs through a self-test that takes about 5 seconds.

Figure 10: Displays on the control panel after starting the unit.

Displays after switching on:
- All illuminated elements remain lit for 1 second.
- The current software version is displayed for 1 second.
- The last temperature setting and 60 RPM are displayed for 3 seconds.

After the self-test, a dot appears in the program display and the temperature display shows the current ambient temperature. The time displayed is 00:00 (hh:mm) and the rotational speed 000 RPM.

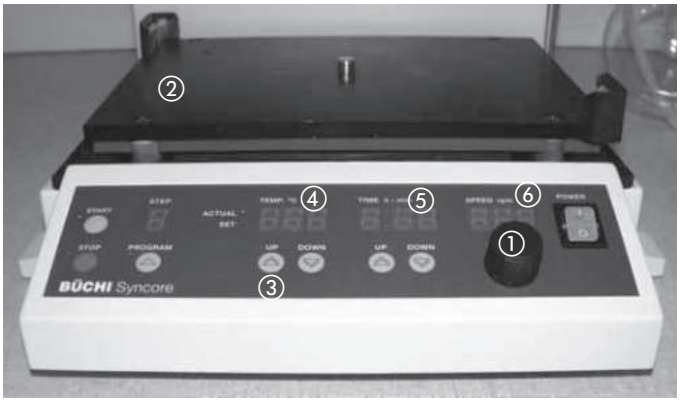

Figure 11: Controlling the basic functions from the control panel

4.4 Function test for drive and speed indicator

There should be no objects of any kind resting upon the base plate or between the base-plate and the housing of the equipment.

- Set a speed of 60 RPM by turning the speed controller ① to the right.
- The Display Unit ⑥ should indicate “60” and the base plate of the basic unit should move slowly without any pronounced vibration.
- Following completion of the function test , reset the speed to 0 RPM

4.5 Function test heating and time

There should be no objects of any kind resting upon the base plate or between the base-plate and the housing of the equipment.

- Press once on the „UP“ button ③ on the temperature control unit. The display ④ shifts from the current temperature to the set-point temperature.
- Press the „UP“ button repeatedly to set a new set-point for temperature of +40 °C.
- After 3 seconds, the unit takes over this new set-point.
- Press the „Start“ button repeatedly. The base plate is heated to the set-point temperature. A dot in the temperature display ④ shows that the heater has been turned ON.
- The time display ⑤ shows how much time has passed since starting.

If not, contact a local BÜCHI service agent.

- Turn the heater OFF after the functional test by pressing once on the “Stop” button.
- To check the temperature of the heating plate, insert an external thermometer (Ø 4 mm) into the reference socket.

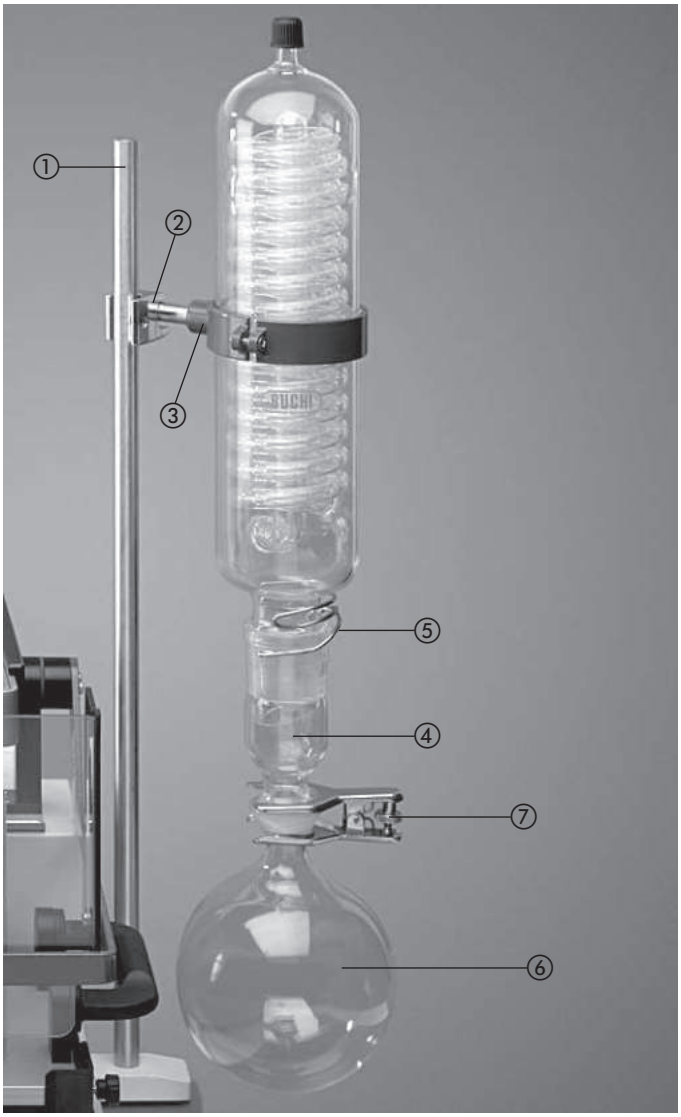

Figure 12: Attachment of the condenser unit

4.6 Attachment of the Condenser Unit S and C

- Screw the right- or left-hand support column ① (depending on the work-place or the working procedure) into the hole provided in the rear feet.
- Secure the cooler bracket (Shackle) ③ to the support column using the cross sleeve ②.
- Secure the cooler to the shackle.
- Attach the transition piece ④ to the cooler with the clamp ⑤.
- Also secure the receiver vessel ⑥ to the transition piece by means of a clamp ⑦.

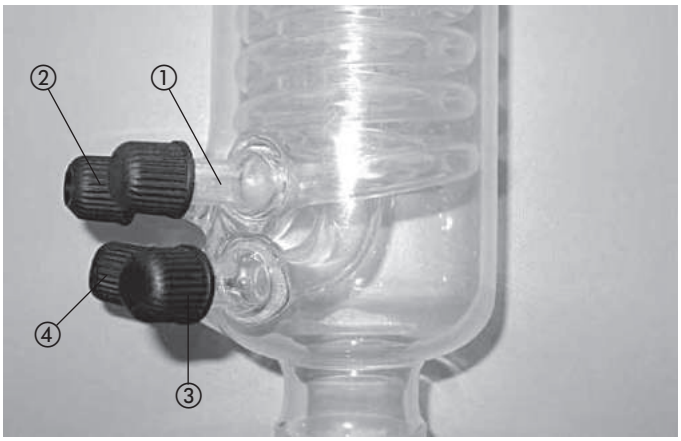

Figure 13: Cooler connections

- Fasten the cold water supply to the connection units ① and ② using GL14 screwed fittings
- Join the connection element ③ to the valve unit by means of a GL 14 sealing cap ④.

We recommend that all hose connections are made safe by using hose clips.

5 Operation

5.1 The Single Platform

Figure 14: The Single Platform

Ensure that the equipment is properly put into service in accordance with the recommendations in Chapter 4, Commissioning.

The use of racks, vacuum connections, and further accessories enable the unit to be used for the:

- Cooling
- Heating
- Shaking and
- Evaporation

of samples in glass tubes.

The handling of the unit has been kept simple. Nevertheless, note all pertinent safety instructions, particularly the general safety rules in Chapter 2 of this Operation Manual, and the individual safety instructions provided for the various individual components (see Operating Instructions - Replacement parts).

5.2 Safety Instructions

Chemicals and Solvents
The unit must be clean before being operated. Residues of chemicals are to be removed following the general rules for working with chemicals.

The unit must not be put into operation if solvents could penetrate into it. If that could happen, place the unit in a well-ventilated fume cupboard and wait until the fumes have been drawn off completely before operating it.

Whenever the unit is being operated with chemicals that are aggressive, toxic, or likely to cause allergic reactions, it should always be located in an fume cupboard.

Indicators, Hoses and Cables
The Syncore single platform must not be operated if individual indicators are not functioning properly and data on parameters such as time, temperature, or speed are missing. Live electrical cables and the hoses for the heating and cooling media must not come into contact with the heated base plate: They could melt.

Hot and Cold Parts
Various parts of the unit can be heated or cooled to from 0 °C to +150 °C. **Never** touch hot or cold parts with your hand. No containers used may become either brittle or soft within the range of temperatures selected.

Exceeding the Maximum Temperature
Do not under any circumstances continue using the unit when the temperature displayed is above 155 °C. Contact a BÜCHI service agent immediately in such a case.

Moving Parts
Various parts of the accessories are accelerated in the horizontal plane to speeds of up to 600 RPM. This means that the machine may cast off parts that have not been fastened correctly and present a risk for the operator and the laboratory equipment. Whenever you have any doubts about how well an accessory part has been fastened, switch the unit OFF immediately and, if necessary, contact a BÜCHI service agent.

Never touch moving parts with your hand or with other laboratory equipment.

An incorrect speed of rotation, eccentricity, or unbalance compensation can cause the unit itself or the area around it to vibrate strongly. In that case, stop the shaking movement and correct the settings.

The unit must never vibrate so strongly that it can move about on the base on its own or cause laboratory equipment to change position.

Never under any circumstance put the unit into operation if you have any doubts about the condition of these vibration elements. Inform a BÜCHI service agent immediately.

It is not permissible for any objects to penetrate into the inside of the unit while it is in operation, nor is it permissible to make any adjustments of the eccentricity or unbalance compensation under such circumstances.

Noises
If ever any strong noises should occur during operation, take the unit out of operation immediately and contact a BÜCHI service agent.

Error messages
The unit must not continue in operation after an error message has been received unless it has been possible to determine the cause of the error and eliminate the error. Otherwise, contact a BÜCHI service agent.

Refer here also to the Chapter, „Error Messages.“

Figure 15: Display of the basic unit after starting up the equipment

5.3 Temperature and speed of rotation

1. Press once on the „UP“ or the „DOWN“ button ② on the temperature control unit. The display ③ shifts from the current temperature to the prescribed set-point temperature.
2. Set a new control temperature by repeated pressing of the Up-Key.
3. After 3 seconds the new control temperature will be accepted by the equipment and the ACTUAL temperature will be displayed. **Heating of the plate, however, only commences after the Start-Key has been pressed!**
4. Turn the speed control ④ clockwise to set the desired number of revolutions per minute.

For higher speeds, please note that the eccentricity and the unbalance compensation must be checked as described below before starting, and must be adjusted if necessary. The reading in the display ⑤ must change when the control is turned and the base plate of the single platform ① must move at the speed that has been set.

5. Starting the Heating Process: Press once on the „Start“ button ⑥ to heat the base plate to the prescribed temperature. A dot in the temperature display indicates that the heater is ON. The running time display shows how much time has elapsed since starting.
6. Changing the temperature during operation in the manual mode: The display for set-point temperature must be activated in a way analogous to Points 3 to 5, and the new temperature desired must then be set. After a delay of 3 seconds, the unit then takes over the new set-point temperature. This does not affect the display for time.
7. Ending the Heating Process: Pressing once on the „Stop“ button switches the temperature control OFF and the unit stops heating. This does not affect the shaking movement.
8. Ending the shaking movement: Turning the speed control counterclockwise reduces the rotational speed and brings the shaking movement to an end.

Important:
The shaking movement prevents retardation of ebullition during the evaporation stage. Pressure should always be equalized with the atmosphere before switching off the shaking movement.

5.4 Program Mode, Temperature/Time Steps

Typical Application:

- Definition of the temperature and time in several stages at a constant RPM, e.g. in a parallel evaporation at different temperatures.
- Repetition of heating cycles for, e.g. material testing cycles

Schematic:
Programming Mode, Controlled Parameters

Figure 16: Display of the basic unit after starting up the equipment

1. Activating the programming function:
   Press once on the „Program“ button.
   The display ② indicates the first step (Step 1).

2. Entering the temperature for Step 1:
   Adjust the set-point for temperature by pressing repeatedly on the „UP“ or „DOWN“ button of the temperature control ③.

3. Entering the time for Step 1:
   Press repeatedly on the „UP“ or „DOWN“ buttons of the time control ④ to define the time for Step 1. The unit will heat the base plate to this temperature and hold it there for this specified length of time.

4. Activating the next step:
   Press once on the „Program“ button ① to activate the next step in the program. The display ② indicates the second step (Step 2).

5. Entering the temperature and time for Step 2:
   Analogous to Points 2 and 3.

6. Defining the last step in the program:
   Press once on the „Program“ button ①. The display ② indicates the next step. Set the time at 00:00. This results in this stage being deactivated and the program being terminated at the end of the previous stage, i.e. the heating is switched off and the equipment continues to rotate at a constant RPM or it stops (dependent upon the safety settings).

   If the Up-Key of the time controller is depressed over a sufficient period for OFF to appear in the display (following the display of 9:59), the equipment continues to operate at the temperature defined in this step until the Stop-Key is pressed.

If the UP-key of the time controller is depressed for a sufficient length of time that the value “to 1” appear in the display, the equipment starts the program again using the 1st program step and the program will repeat indefinitely in a cyclic manner. This step can be interrupted by the user by pressing the Stop-Key.

7. Checking the program:
   Press the „Program“ button repeatedly and check the parameters in all steps of the program. The display jumps back to Step 1 at the end of the program.

8. Starting the program:
   Pressing once on the „Start“ button ⑤ starts the program. The program always starts with the first step, no matter what step is shown on the display.

Comments:
A program cannot be started unless the programming mode has been activated (which is shown by the indication of a step in the display ②), If only a dot, and no step, appears in display field ②, press once on the „Program“ button first to activate the program mode. The program can then be started.

The program mode may be abandoned at any time by pressing twice on the „Stop“ button. The temperature and time parameters entered previously are stored. A program remains stored even after the unit is switched OFF.

Once the speed for the vortex movement is set,remains in effect for all steps in the program. It can, however, be changed manually at any time.

9. Changing parameters while a program or a step in it is in progress: Activate the set-point temperature and/or the set-point time as described in Points 2 and 3 above and set the new set-point temperature and/or set-point time desired. After a delay of 3 seconds, the unit takes over the new set-point parameters. These new set-point parameters are, however, not stored after completion of the program.

10. Ending the program:
    A program can be ended at any time by pressing once on the „Stop“ button. This stops the temperature control for the base plate and/or the heater.
    The programming mode is abandoned by pressing the „Stop“ button a second time.

5.5 Further Control Parameters

5.5.1 Vacuum Connection Heater

The vacuum connection is capable of being heated. This reduces or prevents condensation in the vacuum connection. The heater for the vacuum connection is controlled by the single platform and can be limited to a given maximum temperature by the operator. The temperature of the vacuum connection is always controlled, regardless of whether the unit is being operated manually or via a program.

To deactivate the heating of the vacuum connection, disconnect this from the current supply (24 V Output of the basic unit).

A detailed description of the vacuum connection can be found in the Operating Instructions “Syncore Accessories”

The vacuum connection is heated across two independent heating coils. The maximum power available for heating is 120 W. When the drive for the heating plate is switched ON, some of the electrical power is used for the motor, reducing the power for heating to 70 W. For that reason, we recommend setting the drive at zero whenever no rack with specimens is present on the unit. This ensures that the vacuum connection will reach its operating temperature more quickly.

The temperature of the vacuum connection is restricted to a maximum of 70 °C. The recommended set-point for the temperature of the vacuum connection is 50 °C.

Avoid too low a temperature in the vacuum connection during operation. Otherwise, the vapors of solvents might condense out in the vacuum connection.

5.5.2 Setting the control temperature

Figure 17: Display of the set-point temperature for the vacuum connection

The control temperature of the vacuum connection is obtained by simultaneously pressing on both the UP- and DOWN- Keys ① for the temperature for about 3 seconds. The control temperature appears in the display, e.g. P50 for 50 °C.

The new control temperature for the vacuum connection can be set by pressing either the UP- or DOWN-Key.

After 3 seconds, the existing mode terminates and the new control temperature becomes effective.

Check feature: Active heating of the vacuum connection is indicated by the winking point in the “Actual” Display. This winking stops once the temperature reaches the value of the control point or when the drive is started.

5.6 Pre-Set Safety Settings

Standard Pre-set Settings

The Syncore single platform lets you make specific pre-set safety settings to limit the following operating parameters:

- Maximum temperature, either 150 °C or 100 °C
- Minimum temperature, either +20 °C or –20 °C.
- Rotational speed of the base plate; either 300 or 600 RPM
- Automatic start of the vortex movement at the previously set rotational speed or at a fixed rotational speed of 60 RPM.

An automatic start of the vortex movement of the base plate can be of advantage for integration of the unit into fully automated systems. In such a case, the unit is triggered by an external signal. A program in the unit can be started with a starting signal. Whenever the setting „AutoStart of the vortex movement“ has been selected, the unit uses the speed that was set last. In this case, no manual control of speed is required.

The basic settings differ depending on the configuration in question:

Syncore Single Platform
- Maximum temperature =150°C
- Minimum temperature = -20°C
- Maximum rotational speedt = 600 RPM
  No AutoStart

Syncore Reactor
- Maximum temperature =150°C
- Minimum temperature = -20°C
- Maximum rotational speed = 600 RPM
  No AutoStart

Syncore Polyvap
- Maximum temperature =100°C
- Minimum temperature = +20°C
- Maximum rotational speed = 600 RPM
  No AutoStart

Syncore Analyst
- Maximum temperature =100°C
- Minimum temperature = +20°C
- Maximum rotational speed = 300 RPM
  No AutoStart

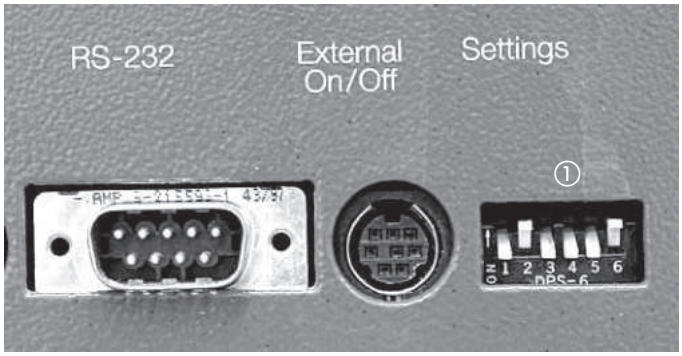

Figure 18: Unit, back view. Detail: Switches of the adjustment socket

Changing the Pre-Set Safety Settings

We advise against raising the maximum temperature above 100 °C, reducing the minimum temperature below +20 °C, or raising the maximum rotational speed above 300 RPM for the Syncore Analyst.

In special cases, the operator can change these safety settings. The unit must be switched OFF. Use a small screwdriver in the adjustment socket ① on the back of the unit to change the settings of the various individual switches.

All those using a unit must be informed of any change in the pre-set settings. Before starting a program, check whether the temperatures entered are compatible with the new settings. Whenever the maximum temperature has been raised, make certain that all the sample tubes and the samples dealt with can withstand a temperature higher than 100 °C.

The repercussions of any change in the parameter „AutoStart of the Vortex Movement“ may be serious. An automatic start of the vortex movement once the „Start“ button is pressed causes a take-over of the shaking speed previously used. At a high (pre-set speed) accompanied by inadequate unbalance/imbalance compensation for the vortex movement this can lead to severe vibrations of the equipment and, at the worst, to material or personal injury.

5.7 Overview of Switches

Switch No.	Function	Position at Top	Position at Bottom
1	Minimum temperature	+20°C	-20°C
2	Maximum temperature	+100°C	+150°C
3	Maximum rotational speed	300 UpM	600 UpM
4	No assigned function		
5	Brake ON / OFF	Brake ON	Brake OFF
6	Motor ON / OFF	Automatic	Not automatic

Table 5: Overview of switches

5.8 Signal-outputs

The Syncore single platform is equipped with various signal outlets that significantly extend the functionality of the unit. There are two 24 V valve signal outlets. One is temperature-controlled, the second is controlled by the ending of a program.

These signal outlets can be used with the corresponding valves to:

- To control the flow of a cooling liquid through the cooling plate in dependence upon the temperature. This facility is employed when the reaction temperatures are less than room temperature
- To control the flow of a cooling liquid through the condenser unit in dependence upon the end of the program. This facility is employed in the case of unattended evaporation overnight with automatic termination of water flow once the end of the program has been reached.

Only the valve recommended by BÜCHI Labortechnik AG should be connected to the signal outlet.

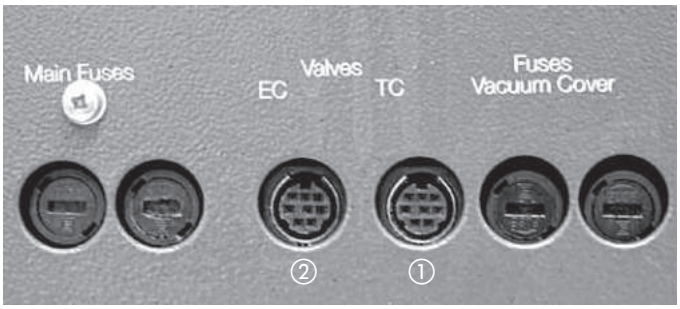

Figure 19: Signal-outputs (EC, TC)

Connection of valve on the socket TC

The signal outlet ① with a temperature-controlled or a temperature-dependent signal has been identified with a TC (for temperature control).

The valve operates as follows: Hysteresis: 0.5°C.

- If the control temperature is lower than actual temperature: Valve open. Cooling liquid from an external cooling system flows through the cooling plate
- If the control temperature is equal to or greater than the actual temperature: Valve closed. Cooling liquid from an external cooling system no longer flows through the cooling plate.

Connection of valve on the socket EC

The signal outlet ② for a signal sent after the end of a program, after a manual stop, or after the direct ending of a program via the „Stop“ button is labelled „EC“ (for End Control).

After a (user-)defined after-running time has elapsed (following the pressing of the „Stop“ button or after the end of the program), the unit sends the signal to the external valve.

The valve is switched on and off as described below:

- The program has not reached its end: Valve open. Cooling water, for example, flows through the condenser unit.
- The program has come to an end: Valve open. Cooling water continues to flow through the condenser unit in order to condense any remaining solvent vapors.
- 1 Hour (= post-program running time) after the program has ended: Valve closed. The flow of cooling water ceases at the expiry of the post-program running time. The duration of this post-program running time may be determined by the user.

5.9 Post-program running time of the program-controlled valve

Figure 20: Display of the post-program running time

The setting of the post-program running time is achieved by simultaneous pressing of the time UP- and DOWN-Keys ① for a period of 3 seconds.

The symbol “EC” appears in the temperature display ② and the current valid post-program running time is shown in the time display ③ in hours and minutes.

By pressing on either the DOWN- or UP-key ① the new post-program running time for switching the valve may be set.

After 3 seconds, the existing mode terminates and the new post-program running time becomes effective.

5.10 RS-232 Interface

The unit also is equipped with an RS-232 interface. At the present time, however, no functions are available for exporting data from the unit across the RS-232 interface.

5.11 Signal Inputs

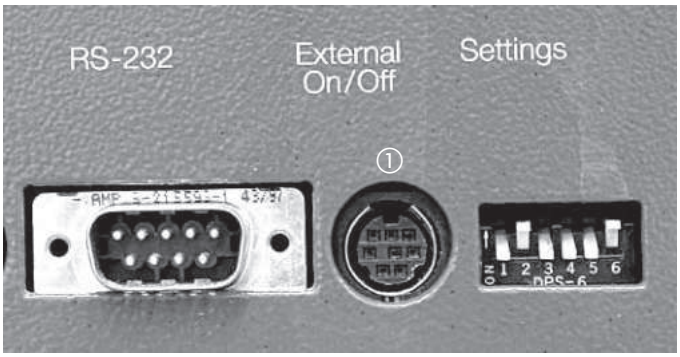

Figure 21: TTL signal inlet (rear view of the unit)

The unit also has an analog TTL-signal inlet ① available. An external start or stop signal can be sent to the Syncore single platform across this TTL-inlet.

Start signal: If the Syncore single platform is in the program mode, a prescribed program (temperature / time steps) is started. Otherwise a manually defined temperature is activated.

Stop signal: If a program has been activated beforehand, that program is stopped. Otherwise, the temperature control previously activated is shut off.

It may be necessary, in conjunction with the use of a TTL-signal, to make a change in a pre-set safety setting. Refer here also to the Chapter „Pre-Set Safety Settings.

An automatic starting of the vortex movement by an external „Start“ signal is effectuated by making a change in the pertinent safety setting. The external „Start“ signal then causes the speed of the shaking movement to be set automatically at the speed that was being used immediately before the last „Stop“ signal or before the last pressing of the „Stop“ button.

5.12 Adjusting the Eccentricity

Introduction

The unit allows an adjustment of the eccentricity of the horizontal shaking movement between 0 and 5 mm.

Please note that the moving parts take up more energy when the eccentricity is greater and the rotational speeds must be reduced accordingly.
If the unit itself or the area around it should begin to vibrate strongly when the shaking movement is started, shut off or reduce the shaking movement immediatelyand adjust the settings.

Select an eccentricity for the vortex movement such that a sample becomes thoroughly mixed, i.e., is brought into a swirling movement, at a minimum shaking speed,

For example, a sample in a R-6 glass (in Rack R-6) is set into a swirling movement very efficiently at 250 RPM with an eccentricity of 4.0 mm. With an eccentricity of 2.5 mm, significantly higher speeds of approx. 400 RPM are needed for the same sample.

In addition to this, the swirling movement of the liquid in the glass is less effective. With an eccentricity of only 1 mm, the sample no longer moves sufficiently.

We recommend the following adjustments of eccentricity:

Rack	Eccentricity
R-4	4 - 5 mm
R-6	4 - 5 mm
R-24	2.5 - 4.5 mm
R-96	2 - 4 mm
Rack for Calypso blocks	0.5 - 4 mm

Table 6: Optimum eccentricities

Defined Stopping Position of the Unit

The Syncore single platform has a built-in sensor that determines the position of the base plate at the given moment relative to a fixed point.

When the horizontal vortex movement of the base plate is ended, this sensor is used to keep the base plate moving in a final rotation until it has reached a pre-defined stopping position. This means that the rack and/or a given sample in the rack are always in the same position before and after a vortex movement. This, for example, makes it possible to integrate the unit into a robot station. The predefined stopping position of the base plate also brings about an exact positioning of the access used for manual adjustment of the eccentricity.

Adjusting Eccentricity

Never make adjustments while the base plate is still moving.

The introduction of the tool into the drive unit while it is still in motion can damage the unit and lead to personal injuries.

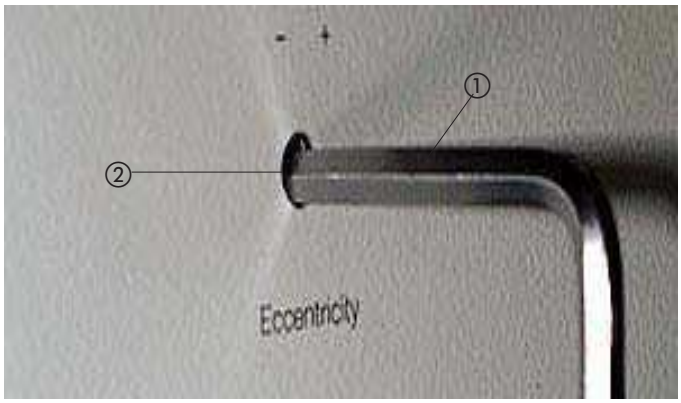

Figure 22: Introduction of the tools for adjusting the eccentricity

The base plate must be in the pre-defined stopping position before any new eccentricity of the vortex movement is set. To ensure this, switch the unit on and let the base plate rotate at least one full rotation.

Use the tool supplied ① to adjust the eccentricity. Insert this into the opening ② on the right side of the single platform.

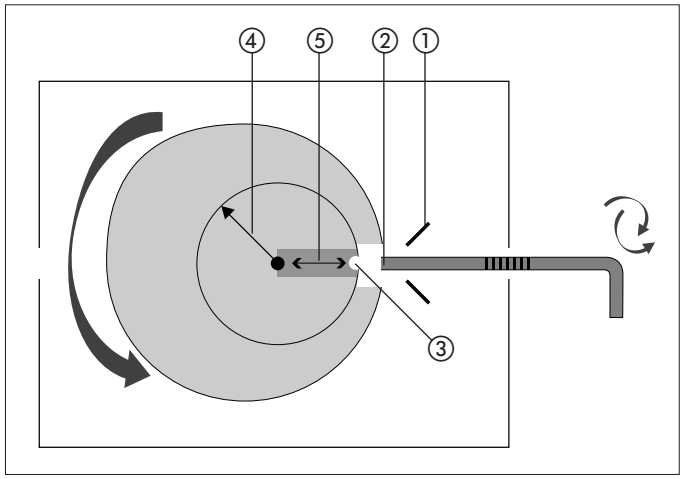

Figure 23: Adjusting eccentricity (schematic)

Not visible to the operator:
A narrowing channel on the guide ① positions the tip of the tool ② directly on the set-screw for eccentricity ③.

- Insert the tool down to the stop tilted slightly upward and under gentle pressure.
- Turn the tool to adjust the eccentricity of the vortex movement.
- Turn clockwise to increase the eccentricity, up to a maximum of 5 mm.
- Turn counterclockwise to reduce the eccentricity, down to a minimum of 0.0 mm.
- One full turn corresponds to a change of 1 mm.
- For reasons of accuracy, the engraving on the adjustment wrench should be used only for adjusting unbalances.

We recommend first setting the eccentricity to the minimum value of 0 mm (down to the stop in a counterclockwise direction). Then reset the desired eccentricity afterwards by turning the a corresponding number of turns in a clockwise direction.

Checking the Setting

The new setting must be checked every time the eccentricity has been changed.

The tool must be removed from the unit. The vortex movement must not be switched ON while the tool is still in the drive. This could cause damage to the unit and lead to personal injuries.

Make a qualitative check by evaluating the swirl in a liquid within a sample tube at the new setting.

Adjust the unbalance compensation before checking. Refer to the Chapter „Unbalance Compensation."

In addition, the eccentricity can be measured with a millimeter gauge based on the travel of the base plate during one rotation. An eccentricity of 5 mm corresponds to a travel of the base plate of 10 mm along a straight line. To measure this, lay a piece of paper on the rubber covering of the unit and let the unit run at 60 RPM. Holding a felt-tip pen against the edge of the heating plate, move the pen down until it traces a circle on the paper. The radius of the circle corresponds to the eccentricity that has been set.

5.13 Unbalance Compensation

Introduction

The unbalance compensation is used to change the distance ① of a balancing weight ② from the horizontal axis ③ of the vortex movement. This balancing weight makes compensation for the moving masses of the base plate and the rack fastened to it. Such compensation is absolutely necessary to ensure smooth and safe operation.

The greater the weight of the base plate, with the accessories and samples on it, and the greater the eccentricity of the vortex movement, the farther the balancing weight must be from the axis.

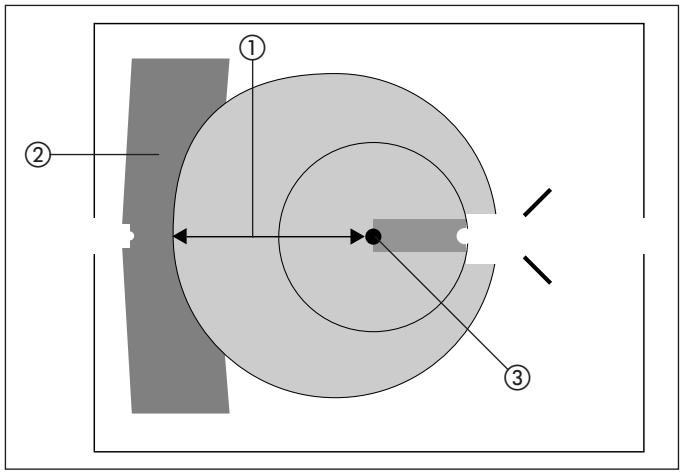

Figure 24: Unbalance Compensation

A missing or incorrect adjustment of the unbalance compensation can result in rough operation and strong vibrations. If that is the case, stop or reduce the vortex movement immediately and adjust the settings.

Adjusting the Unbalance Compensation

Never make any adjustments while the base plate is still moving. Introduction of the tool into the drive unit while it is still moving can damage the unit and cause personal injuries.

The base plate must be in its pre-defined stopping position before setting a new unbalance compensation. To ensure this, switch the unit ON and let the base plate rotate at least one full rotation.

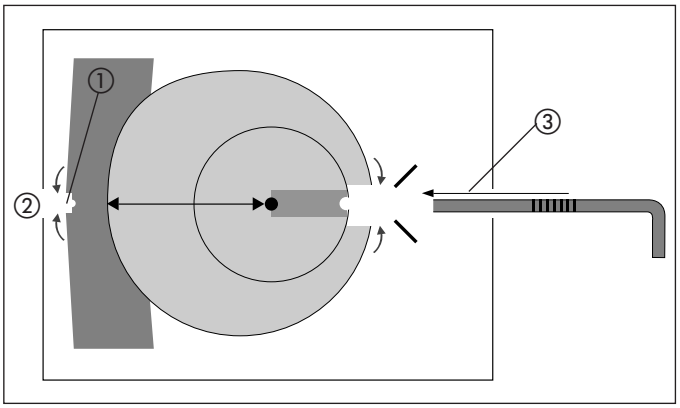

Figure 25: Exact Positioning

Exact Positioning

First bring the internal adjustment mechanism for unbalance ① and the opening ② for introduction of the tool exactly into position.

This positioning is achieved using the tool supplied ③, which is also used to adjust the eccentricity. First insert this tool into the opening on the right side of the single platform to adjust the eccentricity.

Introduce the tool down to the stop tilted slightly upward and under gentle pressure.

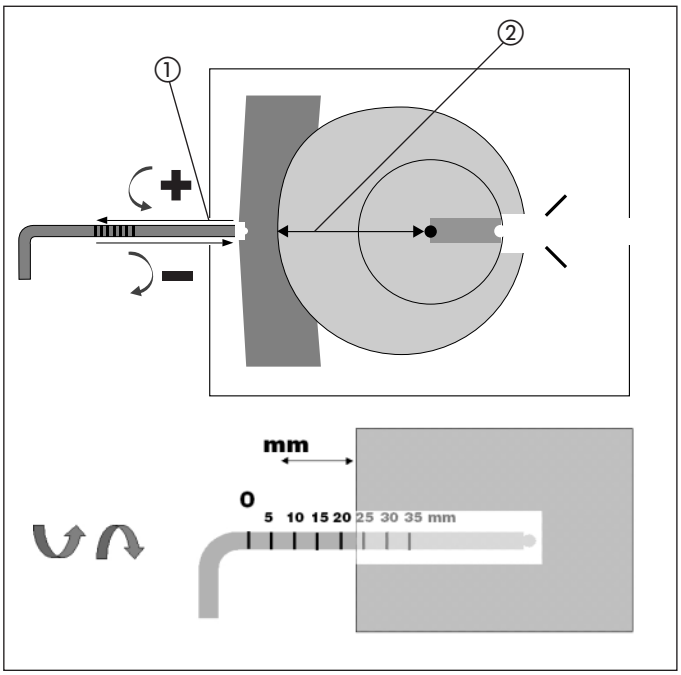

Figure 26: Adjusting the Unbalance Compensation

Introduction of the Tool for Adjusting Unbalance

Introduce the tool into the opening on the left side ① of the single platform. Introduce the tool down to the stop tilted slightly upward and under gentle pressure.

Turn the tool to adjust the distance ② of the counterweight from the central axis. Up to a maximum of 50 turns are possible. Whether or not the tool has been introduced correctly can be checked by observing the markings engraved on the tool itself.

Turning the tool should cause the markings to move inward with respect to the unit housing (when turned counterclockwise) or outward (when turned clockwise).

Turning clockwise reduces the distance of the balancing weight from the axis — compensating for lighter racks.

Turning counterclockwise increases the distance of the balancing weight from the axis.. compensating for heavier racks. The engravings on the adjustment wrench are used to enable a quick re-finding of settings that have already been optimized for a given configuration.

Adjusting the unbalance compensation and eccentricity

Rack with or without vacuum cover	Optimum speed RPM	Optimum eccentricity in mm	Adjustment of the unbalance compensation: Insert and turn the wrench until you reach the value on the adjustment wrench
R-4 with vacuum cover	250	4.0	15 mm
R-6 with vacuum cover	300	4.0	27 mm
R-6 with residual volume and vacuum cover	300	4.0	29 mm
R-24 with vacuum cover	400	4.0	24 mm
R-24 without vacuum cover	400	4.0	15 mm
R-24 with the reflux module	400	4.0	25 mm
R-24 with the reflux module and inert gas connection	400	4.0	35 mm
R-24 with inert gas connection but without the reflux module	400	4.0	25 mm
R-96 without vacuum cover	500	4.0	14 mm
R-96 with vacuum cover	500	4.0	20 mm
R-24 without vacuum cover with cooling plate	400	4.0	18 mm
R-96 without vacuum cover with cooling plate	500	4.0	15 mm

Table 7: Adjusting the unbalance compensation and eccentricity

Checking the Setting

The new setting must be checked whenever a change has been made in the unbalance compensation.

The tool must be removed from the unit. The vortex movement of the unit must not be switched ON while the tool is still in the drive. This could cause damage to the unit and lead to personal injuries.

Fasten the rack and the vacuum connection for which the new settings apply, with the glasses in them, on the platform.

Start the vortex movement slow and slowly increase the speed. This lets you shut off the vortex movement in time if the settings made are incorrect.

Set the desired rotational speed (according to the recommended values for the various racks). If the unbalance compensation has been correctly set, the unit should attain the preset shaking speed without any strong vibrations of its own.If this not the case, the shaking movement must be terminated in order to check if balancing compensation is required and in any case to establish a fine state of balanced. This is achieved by alternating adjustments to and assessments of the settings.

The unbalance compensation needs to be readjusted. The compensation can be fine-tuned by watching movable objects close to the unit (e.g., loose cables, surface of liquids).

5.14 Trouble-Shooting: The Single platform

Observation	Cause	Correction
Display does not light	No power	Connect the unit to the power system. Check fuses. Check the power system
Display lights only in part	Display unit defective	Contact BÜCHI service agent
Unit does not heat up	Heater not turned on	Press „Start“
Unit does not heat up	Heater not turned on	Temperature set-point too low; Setpoint temperature higher than room temperature.
Unit does not heat up	Heater defective	Contact BÜCHI service agent
Unit does not shake	Drive not activated	Turn speed control clockwise
Unit does not shake	Drive blocked by the adjustment wrench	Remove the adjustment wrench
Unit does not shake	Drive belt torn	Contact BÜCHI service agent
Unit does not shake	Drive defective	Contact BÜCHI service agent
Vacuum cover is not heated	The 24 V connection socket has not been connected correctly	Check the plug on the vacuum connection
Vacuum cover is not heatedt	Setpoint temperature too low	Raise the setpoint temperature
Vacuum cover is not heated	Heater defective	Contact BÜCHI service agent
Unit cannot be programmed.	Program mode has not been activated	Press the „Program“ button until 1 appears in the Step display.
Buttons do not react to pressure	Defective contact	Contact BÜCHI service agent
Error message in the display	Mechanical or electronic defect	Contact BÜCHI service agent, refer to Chapter „Maintenance: Error Messages“
Unit shakes but makes noise when doing so	Vibration elements defective	Inspect vibration elements visually and contact BÜCHI service agent
Strong vibrations	Settings for unbalance not optimum	Readjust unbalance compensation
Strong vibrations	Rotational speed not properly adjusted	Reduce speed

Table 8: Trouble-shooting: the single platform

6 Maintenance

6.1 Cleaning

Single Platform

- Use a cloth dampened in alcohol to clean the housing of the Syncore single platform. If it is severely fouled, a mild detergent and water may be used.
- Never use hard brushes to clean the base plate.
- If it is severely fouled, the black rubber ring around the base plate may be removed and cleaned with a mild detergent or with alcohol.

6.2 Routine Inspection of the Equipment (monthly)

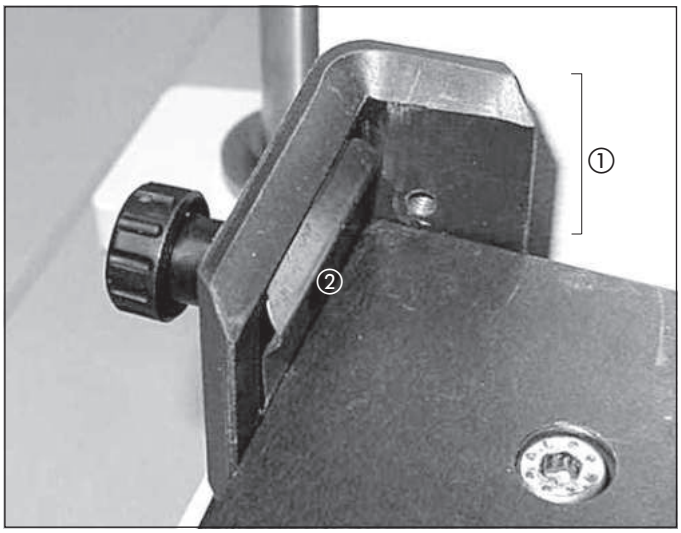

Figure 27: Corner brackets and springs

General

- The unit must run quietly, without any significant noises from its drive.
- The unit must run without any strong vibrations.

Rack Mount

Check the corner brackets ① and the springs ② for the rack mount on the base plate:
- No broken sections;
- Screws screwed tightly into the corner brackets;
- Rack held securely in place.

Base Plate Mount

The base plate rests on four vibrating elements that take up the vibrations of the base plate.

Inspect these visually once a month:
- No broken sections;
- No wear;
- No loose bolting
  To do this, lift the black covering slightly and look into the unit from the side.

6.3 Routine Inspection of the Equipment
(Annually)

Figure 28: External thermal sensor in the base plate

Temperature Control Unit

The base plate heater is checked by the user or by a BÜCHI service agent using an external temperature sensor.

For this, introduce a thermocouple Ø 4 mm (see chapter, Replacement Parts) into the hole at the side of the base plate ① and check the temperature of the base plate while it is in a steady state condition:

at 50 °C, at 100 °C, and at 150 °C.

If necessary, the heater and the measurement of temperature in the single platform can also be calibrated.

6.4 Calibration

Introduction

The user can check and calibrate the measurement of temperature in the heating plate of the Syncore single platform at any time (Our service agent will be happy to do the calibration for you). The calibration takes place automatically, controlled by the single platform.

The internal temperature measurement within the unit using the Pt-1000 sensor built into the heating plate is compared here with the temperature measured by an external reference sensor. Three measurements of temperature are compared: 50 °C, 100 °C, and 150 °C.

Material Needed

A reference sensor must be used to calibrate the temperature (see chapter, Replacement Parts).

A reference sensor with an unknown accuracy or an incorrect indication of temperature can cause an incorrect calibration of the temperature measurement in the heating plate of the Syncore single platform.

Activating the Calibration Mode

- The unit must be switched OFF.
- To activate the mode for calibration of the unit, press the „Stop“ and „Program“ buttons simultaneously and switch the unit ON. Continue pressing the two buttons until cross-dashes (— —— ——) appear in the display and a „C“ appears in the Step Display. The calibration mode has now been activated. This can be abandoned only by switching the machine OFF and then switching it back ON again.

Procedure

Figure 29: Sensor in the heating plate

1) The heating plate must first cool to below 40 °C. Introduce the reference sensor ① into the appropriate hole in the heating plate ②.

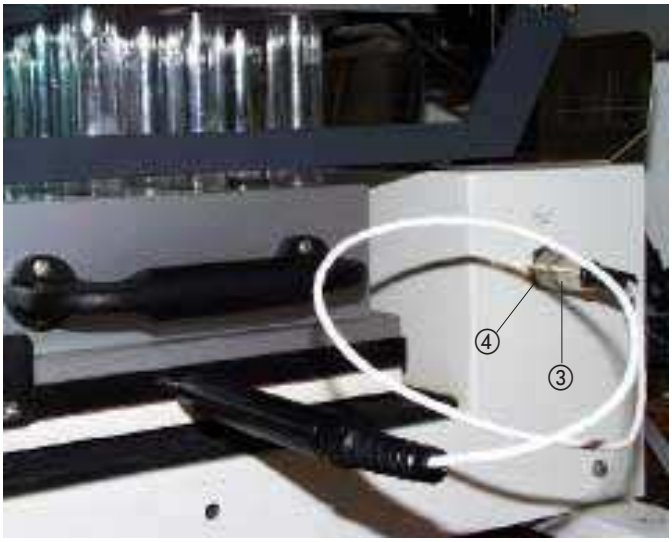

Figure 30: Sensor plug and socket on the single platform

2) Insert the plug ③ on the reference sensor into reference socket ④ on the single platform.

3) Activate the calibration mode as described above.

4) The unit is now run up to the three temperatures 50 °C, 100 °C, and 150 °C. The displayed set-point for temperature flashes while the plate is heating up. Once the temperature is stable, the display stops flashing and the measurement is taken for the period of one minute. The unit then proceeds to the next higher value for temperature.

The heating plate becomes very hot during the calibration process. Do not touch it with your bare hands.

5) If the calibration proceeds without any problems, it lasts approx. 30 minutes. On its conclusion, the word „End“ appears on the temperature display. The unit automatically takes over the temperature values from the external sensor and/or the corrections that result from them.

6.5 Error Messages: Calibration

Whenever the progress of the calibration is interrupted by an error, „End“ appears in the temperature display and the pertinent error number appears in the time display. These errors (unlike technical malfunctions of the unit) can be deleted again by pressing a button.

The following error messages are possible in the calibration mode:

Error No.	Description	Cause
50	Heating plate too hot.	The temperature of the heating plate was above 40 °C at the start
51	Temp. reference >200 °C	No reference sensor or interruption
52	Too much time	50°C was not reached within 20 minutes.
53	Correction too large	Difference between internal and external sensors at 50°C >± 2 °C
54	Measurement not stable	Temperature is not stable at 50 °C.
55	Too much time	100 °C was not reached within 20 minutes.
56	Correction too large	Difference between internal and external sensors at 100°C >± 2°C
57	Measurement not stable	Temperature is not stable at 100 °C
58	Too much time	150 °C was not reached within 20 minutes.
59	Correction too large	Difference between the internal and external sensors at 150 °C >± 2°C
60	Measurement not stable	Temperature is not stable at 150 °C.

Table 9: Error messages during calibration

The calibration process must be restarted after an error message. Whenever repeated messages make it impossible to complete the calibration, notify your service agent.

6.6 Replacement of the Fuses

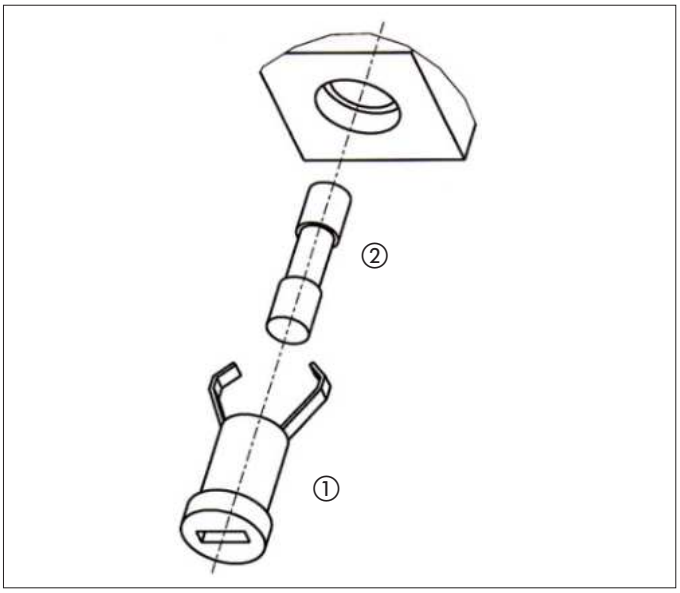

Figure 31: Checking / Changing Fuses

The fuses for the Syncore single platform and the fuses for the vacuum connection are located on the back of the unit.

Before replacing defective fuses, check that the voltage of the power system agrees with that shown on the nameplate of the unit. It is always necessary to check both fuses and to replace them if necessary.

A frequent blowing of fuses may indicate the presence of a technical defect. Please contact your BÜCHI service agent.

- Disconnect the apparatus from the power source
- Remove the fuse holders ① with a screwdriver
- Replace defective fuses ② with others of the same type.
- Replace the fuse holders ①

6.7 Error Messages: Hardware

Error No.	Cause	Correction
1	Hardware ROM	BÜCHI service agent
2	Hardware RAM	BÜCHI service agent
3	AD transducer	BÜCHI service agent
4	Checksumm EERPOM	BÜCHI service agent
5	Hardware error EERPOM	BÜCHI service agent
6	Power supply +24V Motor not within tolerances	BÜCHI service agent
7	Power supply +24V Heating not within tolerances	BÜCHI service agent
8	Hardware error Start button	BÜCHI service agent
9	Hardware error Start button	BÜCHI service agent
10	Hardware error Start button	BÜCHI service agent
11	Hardware error Start button	BÜCHI service agent
12	Hardware error Start button	BÜCHI service agent
13	Hardware error Start button	BÜCHI service agent
14	Hardware error Start button	BÜCHI service agent
15	Motor drive	BÜCHI service agent
16	Temperature sensor Channel short-circuit	BÜCHI service agent
17	Temperature sensor Channel 1 interruption	BÜCHI service agent
18	Power system voltage not within tolerances	BÜCHI service agent
19	Temperature sensor Channel 2 short-circuit	BÜCHI service agent

Table 10: Error messages: Hardware

6.8 Customer Service

Only authorized service staff are permitted to intervene on or within the unit.

The addresses of the official BÜCHI Customer Service agents are shown on the back cover page of this Operation Manual. In case of malfunctions, technical questions, or problems in application, please contact these offices.

BÜCHI's Customer Service Depts. stand ready to help you with the following:

- Spare part service
- Repair service
- Maintenance service
- Technical consultation

7 Taking out of Operation

Before the unit and its accessories are transported, all hoses must be removed and internal chambers must be cleaned of all residues of reagents, heating, or cooling agents. All parts must be clean, with no chemicals present on the unit itself or on its accessories.

7.1 Storage / Transport

Wherever possible the unit, and its accessories are to be stored and shipped in the original packages.

7.2 Disposal

The Appendix in Chapter 9 contains a list of the materials used so as to enable ecologically sound disposal of the unit. This is to ensure that the parts can be separated and sent properly for recycling.

Please observe all national, regional, and local laws pertaining to waste disposal.

8 Replacement Parts

Only original accessory and spare parts ensure operating safety and the proper functioning of this unit and its accessories in the Syncore line of equipment.

The use of spare parts and accessories other than those from BÜCHI is permissible only with prior approval from BÜCHI AG.Observe the general safety rules and Chapter 6 when installing and removing spare parts.

8.1 Single platform

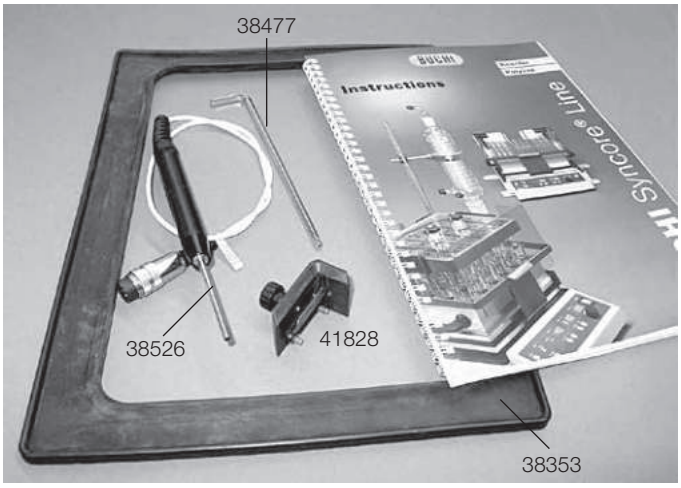

Figure 32: Replacement parts for the single platform

	Description	Order code
1	Adjustment wrench	**38477**
1	Operation Manual	
	German	**96886**
	English	**96887**
	French	**96888**
	Italian	**96889**
	Spanish	**96890**
1	Corner bracket kpl., 1 pcs. (Corner mounts for racks)	**41828**
1	Covering, middle (Rubber mat)	**38353**
1	Reference sensor for calibrating the Syncore single platform	**38526**
1	Set of equipment feet (4 units)	**41984**

Table 11: Replacement parts for the single platform

9 Appendix

9.1 Technical Data

Dimensions of the unit(LxBxH)	480 x 487 x 354 mm
Weight	30 Kg
Power connections	230 V, 50/60 Hz 120 V, 50/60 Hz 100 V, 50/60 Hz
Power take-up	1500 W
Power take-up for the vacuum connection:	Maximum 120 W
Ambient temperature	5°C-40°C
Range of temperatures: Heating plate:	-20°C to room temperature (with external cooling unit)
Range of temperatures: Heating plate:	Room temperature to +150°C
Range of temperatures: Vacuum connection:	Room temperature to +70°C
Rotational speed:	0-600 UpM
Pre-set safety settings:	Speed, Min. and max. temperature, AutoStart
Program:	9 Steps of up to 9 hours , 59 minutes
Connections:	TTL for an external ON / OFF signal
Valve connection:	24V DC, temperature-controlled, hysteresis 0.5°C
Valve connection:	24 V DC, programmable
RS-232:	Inactive

Table 12: Technical Data

9.2 Materials Used

Description	Materials	Material Code
Single platform	Sheet steel, coated	St 12.03
Protective shield	Plexiglass	PMMA
Rubber covering	Black natural rubber	NK
Rack	Aluminum, anodized	AL
Vacuum connection	Aluminum with PFA coating	AL
Glass in vacuum connection	Borosilicate glass, hardened	3.3
Vacuum hose	Ribbed PFA	PFA
Condenser unit	Borosilicate glass	3.3
Sealing discs Rack R-6	PTFE coating	PTFE/rubber
Glass with residual volume appendage Glass R-4 and Glass R-6	Borosilicate glass	3.3
Sealing discs, Rack R-24 and R-96	Polyethylene	PE
Cooling plate	Aluminum, anodized	AL

Table 13: Materials Used

9.3 FCC requirements (for USA and Canada)

English:

This equipment has been tested and found to comply with the limits for a Class A digital device, pusuant to both Part 15 of the FCC Rules and the radio interference regulations of the Canadian Department of Communications. These limits are designed to provide reasonable protection against harmful interference when the equipment is operated in a commercial environment.

This equipment generates, uses and can radiate radio frequency energy and, if not installed and used in accordance with the instruction manual, may cause harmful interference to radio communications. Operation of this equipment in a residential area is like to cause harmful interference in which case the user will be required to correct the interference at his own expense.

Français:

Cet appareil a été testé et s'est avéré conforme aux limites prévues pour les appareils numériques de classe A et à la partie 15 des règlementation FCC à la règlementation des radio-interférences du Canadian Department of communications. Ces limites sont destinées à fournir une protection odéquate contre les interférences nétastes lorsque l'appareil est utilisé dans un environnement commercial.

Cet appareil génère, utilise et peut radier une énergie à fréquence radioélectrique, il est en outre susceprible d'engendrer des interferences avec les communications radio, s'il n'est pas installé et utilisé conformément aux instructions du mode d'emploi. L'utilisation de cet appareil dans les zones résidentielles peut causer des interférences nèfastes, auquel cas l'exploitant sera amené à prendre les dispositions utiles pour polier aux interférences à ses propres frais.

9.4 Declaration of Conformity

We, **Büchi** Labortechnik AG
P.O.Box, CH-9230 Flawil
Switzerland

declare on our sole responsibility that the product:
BÜCHI Syncore Product Line,

to which this declaration pertains, conforms to the following standards:

EN 61010-1:1993 (~ IEC 1010-1, VDE 0411-1)
Safety Rules for Electrical Measurement, Control, and Laboratory Units: General Requirements

EN 55011:1991/B (~ VDE 0875/B, VDE 0871/B)
Limit Values and Measurement Procedures for Radio Interference from High-Frequency Industrial, Scientific, and Medicinal Equipment

EN 50081-1:1992
Electromagnetic compatibility - Generic immunity standard: Residential, commercial, light industry.

In accordance with the provisions of EU-Guidelines:

73/23/EWG (Electrical Operating Equipment / Low Voltage Guidelines)
89/336/EWG (Electromagnetic Compatibility)

Flawil, 24.04.2002

BÜCHI Labortechnik AG
Meierseggstrasse 40
CH-9230 Flawil
Switzerland

Tel. +41 (0)71 394 63 63
Fax +41 (0)71 394 65 65

buchi@buchi.com
www.buchi.com

Guido Worch
Qualitymanager